DIGITAL LOGIC FUNDAMENTALS

Course Code	:30801220
Credit Hours	:3
Prerequisite	: 30801101

Chapter 4

Theorems of Boolean Algebra

THEOREMS OF BOOLEAN ALGEBRA
&
SIMPLIFICATION OF BOOLEAN FUNCTIONS

Simplification of Boolean Functions

- Digital computers contain circuits that implement Boolean functions.
- The simpler that we can make a Boolean function, the smaller the circuit that will result.
  - *Simpler circuits are cheaper to build, consume less power, and run faster than complex circuits.*
- With this in mind, we always want to reduce our Boolean functions to their simplest form.
- There are several Boolean identities that help us to do this.

Simplification methods

- There are 2 methods for simplification of Boolean functions:

1. The algebraic method → using theorems of algebra
2. The graphical method → using Karnaugh Map (K-Map)

Commutative Laws

خاصية التبديل في الجمع والضرب

The **commutative laws** are applied to addition and multiplication. For addition, the commutative law states

In terms of the result, the order in which variables are ORed makes no difference.

$$A + B = B + A$$

For multiplication, the commutative law states

In terms of the result, the order in which variables are ANDed makes no difference.

$$AB = BA$$

Associative Laws

خاصية التجميع

The **associative laws** are also applied to addition and multiplication. For addition, the associative law states

When ORing more than two variables, the result is the same regardless of the grouping of the variables.

$$A + (B + C) = (A + B) + C$$

For multiplication, the associative law states

When ANDing more than two variables, the result is the same regardless of the grouping of the variables.

$$A(BC) = (AB)C$$

Distributive Law

خاصية التوزيع

The **distributive law** is the factoring law. A common variable can be factored from an expression just as in ordinary algebra. That is

$$AB + AC = A(B + C)$$

The distributive law can be illustrated with equivalent circuits:

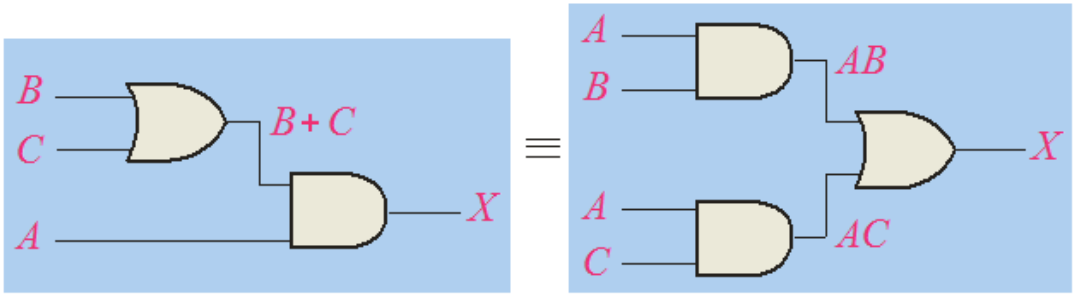

$A(B + C)$ $\qquad$ $AB + AC$

$$X+(Y \cdot Z) = (X+Y) \cdot (X+Z)$$

Rules of Boolean Algebra

Identity Name	AND Form	OR Form
Commutative Law	$xy = yx$	$x+y = y+x$
Associative Law	$(xy)z = x(yz)$	$(x+y)+z = x + (y+z)$
Distributive Law	$x+yz = (x+y)(x+z)$	$x(y+z) = xy+xz$

Rules of Boolean Algebra

1. $A + 0 = A$
2. $A + 1 = 1$
3. $A \cdot 0 = 0$
4. $A \cdot 1 = A$
5. $A + A = A$
6. $A + \bar{A} = 1$
7. $A \cdot A = A$
8. $A \cdot \bar{A} = 0$
9. $\bar{\bar{A}} = A$
10. $A + AB = A$
11. $A + \bar{A}B = A + B$
12. $(A + B)(A + C) = A + BC$

Rules of Boolean Algebra

- Most Boolean identities have an AND (product) form as well as an OR (sum) form. We give our identities using both forms. Our first group is rather intuitive:

Identity Name	AND Form	OR Form
Identity Law	$1x = x$	$0 + x = x$
Null Law	$0x = 0$	$1 + x = 1$
Idempotent Law	$xx = x$	$x + x = x$
Inverse Law	$x\bar{x} = 0$	$x + \bar{x} = 1$

DeMorgan's Theorem

DeMorgan's 1st Theorem

The complement of a product of variables is equal to the sum of the complemented variables.

$$\overline{AB} = \overline{A} + \overline{B}$$

Applying DeMorgan's first theorem to gates:

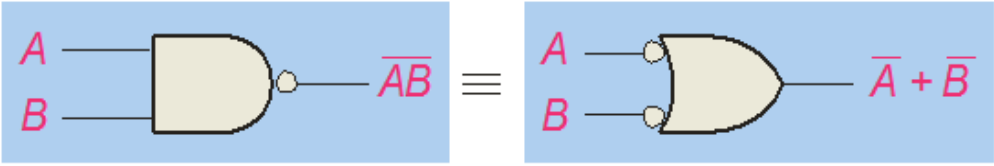

NAND Negative-OR

Inputs		Output	
A	B	$\overline{AB}$	$\overline{A} + \overline{B}$
0	0	1	1
0	1	1	1
1	0	1	1
1	1	0	0

DeMorgan's Theorem

DeMorgan's 2nd Theorem

The complement of a sum of variables is equal to the product of the complemented variables.

$$\overline{A+B} = \overline{A} \cdot \overline{B}$$

Applying DeMorgan's second theorem to gates:

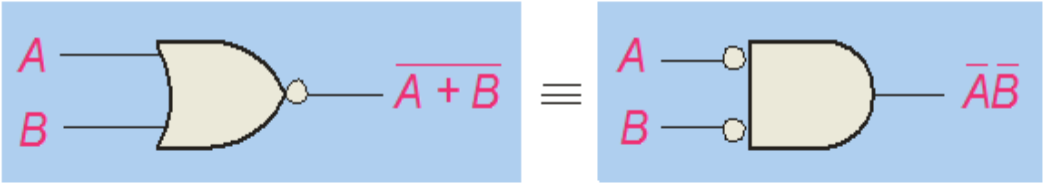

NOR Negative-AND

Inputs		Output	
A	B	$\overline{A+B}$	$\overline{A}\,\overline{B}$
0	0	1	1
0	1	0	0
1	0	0	0
1	1	0	0

Example 1

$$A + AB = A$$

$A + AB$

↓ Factoring **A** out of both terms

$A(1 + B)$

↓ Applying identity $A + 1 = 1$

$A(1)$

↓ Applying identity $1A = A$

A

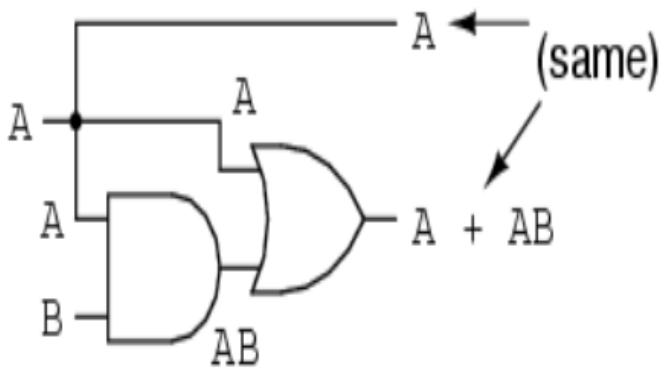

Example 2

$$A + \overline{A}B = A + B$$

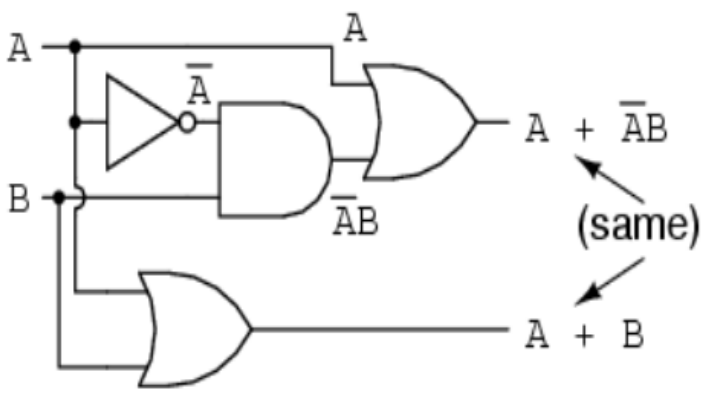

$A + \overline{A}B$

Applying the previous rule to expand **A** term

$$A + AB = A$$

$A + AB + \overline{A}B$

Factoring **B** out of 2nd and 3rd terms

$A + B(A + \overline{A})$

Applying identity $A + \overline{A} = 1$

$A + B(1)$

Applying identity $1A = A$

$A + B$

Example 3

$$(A + B)(A + C) = A + BC$$

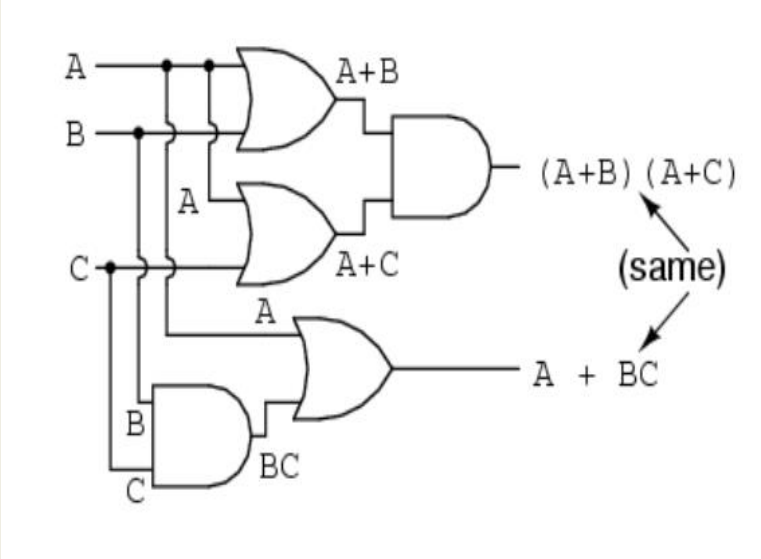

$(A + B)(A + C)$

↓ Distributing terms

$AA + AC + AB + BC$

↓ Applying identity $AA = A$

$A + AC + AB + BC$

↓ Applying rule $A + AB = A$ to the $A + AC$ term

$A + AB + BC$

↓ Applying rule $A + AB = A$ to the $A + AB$ term

$A + BC$

Example 4

$$AB+A(B+C)+B(B+C)$$

Use distributive law $A(B+C) = AB+AC$

$$= AB+AB+AC+BB+BC$$

Use rule #5, $A+A = A$ then $A+A = A$

$$= AB + AC + B + BC$$

Use distributive law $A(B+C) = AB+AC$

$$= AB+AC+B(1+C)$$

Use rule #2 $(1+A) = 1$

Example 4 (cont.)

$$= AB+AC+B$$

Use commutative law $A+B = B+A$

$$= AB+B+AC$$

Use commutative law $A+B = B+A$, $AB = BA$

$$= B+BA+AC$$

Use distributive law $A(B+C) = AB+AC$

$$= B(1+A)+AC$$

Use rule #2 $(1+A) = 1$

$$= B+AC$$

Answer

Example 5

$$\underline{\bar{A}BC} + A\bar{B}\bar{C} + \bar{A}\bar{B}\bar{C} + A\bar{B}C + \underline{ABC}$$

$$BC(\cancel{\bar{A}+A}^{1}) + \underline{A\bar{B}\bar{C}} + \underline{\bar{A}\bar{B}\bar{C}} + A\bar{B}C$$

$$BC + \bar{B}\bar{C}(\cancel{\bar{A}+A}^{1}) + A\bar{B}C$$

$$\underline{BC} + \bar{B}\bar{C} + \underline{A\bar{B}C}$$

Example 6

$$
\begin{aligned}
F &= A.\overline{B} + A.B + B.C \\
&= A.\,(\overline{B} + B) + B.C \\
&= A.1 + B.C \\
&= A + B.C
\end{aligned}
$$

Simplification steps

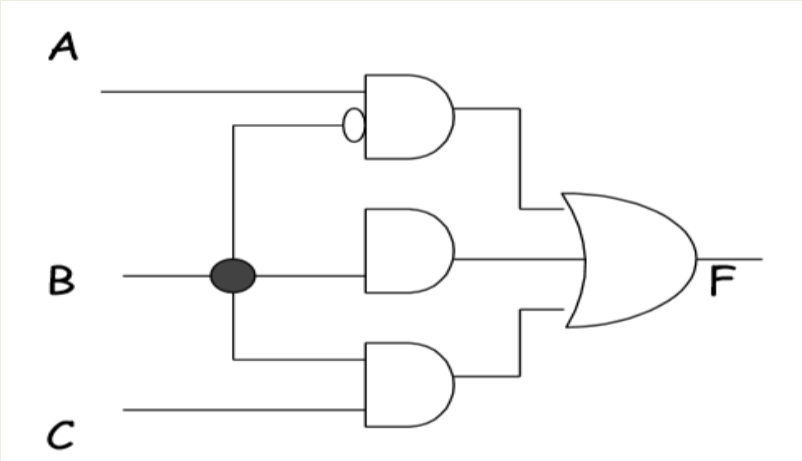

Before

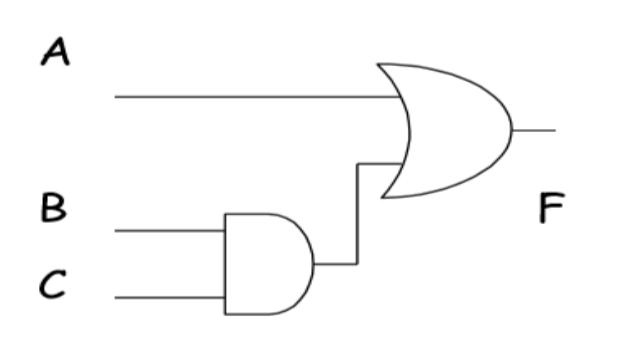

After

Example 7

$$F(X,Y,Z) = (X + Y)(X + \overline{Y})\overline{(X\overline{Z})}$$

$(X + Y)(X + \overline{Y})\overline{(X\overline{Z})}$	Idempotent Law (Rewriting)
$(X + Y)(X + \overline{Y})(\overline{X} + Z)$	DeMorgan's Law
$(XX + X\overline{Y} + XY + Y\overline{Y})(\overline{X} + Z)$	Distributive Law
$((X + Y\overline{Y}) + X(Y + \overline{Y}))(\overline{X} + Z)$	Commutative & Distributive Laws
$((X + 0) + X(1))(\overline{X} + Z)$	Inverse Law
$X(\overline{X} + Z)$	Idempotent Law
$X\overline{X} + XZ$	Distributive Law
$0 + XZ$	Inverse Law
XZ	Idempotent Law

Homework

- Simplify the following Boolean function to obtain the (Fs) function then draw the relevant circuits for F and Fs functions

$$F = \overline{A}.B.C + A.\overline{B}.C + A.B.\overline{C} + A.B.C$$

Solution

$$F = \overline{A}.B.C + A.\overline{B}.C + A.B.\overline{C} + A.B.C$$

$$= \overline{A}.B.C + A.\overline{B}.C + A.B.\overline{C} + A.B.C + A.B.C + A.B.C$$

$$= (\overline{A}.B.C + A.B.C) + (A.\overline{B}.C + A.B.C) + (A.B.\overline{C} + A.B.C)$$

$$= (\overline{A} + A).\ B.C + (\overline{B} + B).\ C.A + (\overline{C} + C).\ A.B$$

$$= B.C + C.A + A.B$$

Homework

$$\overline{\overline{((\overline{A\overline{B}C})+B)} \cdot B(\overline{A+\overline{C}})}$$

Simplify the Boolean function then simulate the circuit before and after simplification

Solution

$$\overline{\overline{\overline{((A\overline{B}C)+B)}}} \cdot B\overline{(A+\overline{C})}$$

$$\overline{((A\overline{B}C)+B)} \cdot B\overline{(A+\overline{C})}$$

$$((\overline{A}+\overline{\overline{B}}+\overline{C})+B) \cdot B(\overline{A} \cdot \overline{\overline{C}})$$

$$(\overline{A}+B+\overline{C}+B) \cdot B\overline{A}C$$

$$((\overline{A} + B + \overline{C})\ \overline{A}BC$$

$$\cancel{\overline{A}\overline{A}}BC + \overline{A}BBC + \cancel{\overline{A}B\overline{C}}C$$

zero

$$\overline{A}BC + \overline{A}BC = \overline{A}BC$$

Given the Boolean expression for F

$$F = (\bar{A}\,B\bar{C}) + (\bar{A}\,BC) + (A\bar{B}\,C) + (ABC)$$

In terms of Sum of products SOP expression

- 4 product terms
- 12 literals
- 3 variables

Literal:

- A variable or its complement is called a literal.

Simplify the function F to only four literals

$$F = (\bar{A}\,B\bar{C}) + (\bar{A}\,BC) + (A\bar{B}\,C) + (ABC)$$

$$\bar{A}\,B\,(\bar{C}\,C) + AC\,(\bar{B}\,B)$$

$$\bar{A}\,B\,(1) + AC\,(1)$$

$$Fs = \bar{A}\,B + AC$$

The cost of building the circuit for Fs

$$Fs = \overline{A}\,B + AC$$

Sum of products expression form

- 2 product terms
- 3 variables
- 4 literals

Truth table for F

$$F = (\bar{A}\,B\bar{C}) + (\bar{A}\,BC) + (A\bar{B}\,C) + (ABC)$$

A	B	C	F
0	0	0	0
0	0	1	0
0	1	0	1
0	1	1	1
1	0	0	0
1	0	1	1
1	1	0	0
1	1	1	1

Truth Table for Fs

$$Fs = \overline{A}\,B + AC$$

A	B	C	Fs
0	0	0	0
0	0	1	0
0	1	0	1
0	1	1	1
1	0	0	0
1	0	1	1
1	1	0	0
1	1	1	1

Compare the truth table obtained in the two circuits by tracing the run of their simulation

Truth Table

A	B	C	F	F_s
0	0	0		
0	0	1		
0	1	0		
0	1	1		
1	0	0		
1	0	1		
1	1	0		
1	1	1		

Table: Circuit Cost

Function	Number of			
	Literals	Terms	Gates	ICs
F				
F_s				

Observations

Cost of Fs < Cost of F

In terms of the number of gates and ICs required to build the two circuits